INVESTIGATION INTO THE FORMABILITY OF CARBON FIBRE/POLYETHER ETHER KETONE COMPOSITE SHEETS IN STAMP FORMING PROCESSES

S. Davey[1*], W. Cantwell[2], R. Das[3], S. Kalyanasundaram[1]

[1]*Research School of Engineering, Australian National University, Canberra, 0200, Australia*
[2]*Centre for Materials and Structures, University of Liverpool, L69 3BX Liverpool, United Kingdom*
[3]*Department of Mechanical Engineering and Centre for Advanced Composite Materials, University of Auckland, Auckland*
**seb.davey@anu.edu.au*

Keywords: real time strain measurements, stamp forming, thermoplastic composites

Abstract
In this work, consolidated composite blanks of carbon fibre/polyether ether ketone (CF/PEEK) were stamped until failure with a hemispherical punch under various temperatures. Real-time strain measurements were extracted using three-dimensional photogrammetry. The results were evaluated with benchmarks used in metal forming. These were then compared to aluminium blanks formed under similar conditions. Under certain circumstances, the composite exhibited comparable formability to aluminium. This is particularly significant, as CF/PEEK is a high performance composite with superior specific mechanical properties compared to monolithic metal alloys. These results highlight the potential for composites such as this to replace heavier metals in various industries, without sacrificing performance or increasing manufacturing expenses.

1 Introduction
In the transport industry, increasing social concern regarding climate change is shifting the focus of vehicle design towards improving fuel efficiency and reducing in vehicle weight. Weight reduction can be achieved by selecting alternative materials to monolithic metals. The high specific stiffness and strength of many composite materials make them an ideal choice for replacing metals in vehicle manufacturing, as parts can be created with similar mechanical properties, but less weight. Thermosetting resin-based composite structures are a commonly used alternative to metals in the automotive industry. Whilst they provide favourable mechanical properties over a broad range of temperatures, they require time-consuming manufacturing processes involving lay-up and curing [1]. The high costs associated with such processes have restricted the use of composite structures to specialty applications. The Airbus A380 contains a glass fibre reinforced composite throughout the fuselage. Carbon fibre based composites are employed in modern F1 cars, in the chassis as well as in non-structural components. In order for composite materials to be broadly utilised within the transport industry, rapid, automated manufacturing techniques must be developed that will allow composite parts to be created at costs comparable to metals.

Metallic components can be quickly and cheaply formed through different manufacturing techniques. Stamp forming is widely regarded as the fastest technique. This involves the deformation of a solid sheet of material via a punch. Thermosetting composites are not well suited to stamp forming, as the molecular structure of the thermoset does not allow for material flow. Thus, no significant permanent deformation can occur. Thermoplastic composites can be softened as the temperature approaches the melting point of the matrix (T_m). This enables the material to flow, allowing them to be utilised in stamp forming processes. Additionally, the existence of a melting point allows thermoplastic composites to be recycled, unlike thermosets.

Research on thermoplastic composites has shown that polypropylene-based composites can be formed to depths comparable to aluminium [2], [3]. There have also been various studies on the formability of composite/metal sandwich structures involving thermoplastics, in which these materials demonstrated significant formability in stamp forming processes [4], [5]. Mosse *et al* demonstrated that the process temperature of the composite part affected the forming of composite metal sandwich structures [6], and developed a finite element model to simulate the stamp forming of such materials [7]. This suggests that such materials could provide a suitable alternative to monolithic metals in many applications, but they still exhibit some crucial limitations. The stiffness of polypropylene is extremely low compared to metals, and this restricts the achievable stiffness of the final composites. Polypropylene melts above approximately 150°C, and its mechanical properties are still affected by temperature below this point. Polyether ether ketone (PEEK) is a thermoplastic with superior stiffness and strength compared to polypropylene, and it maintains its mechanical properties through a greater range of temperatures. When a continuous carbon fibre weave is embedded in a PEEK matrix, the resulting composite (CF/PEEK) can exhibit a greater strength than steel, and a stiffness comparable to aluminium [8]. Such a material provides the favourable mechanical properties of a thermosetting composite, with the formability and recyclability of a thermoplastic.

There are several published studies that discuss the behaviour of CF/PEEK in hot-forming processes [9], [10]. In these cases, the composite blanks are heated to temperatures above the melting point of PEEK before they are deformed by a punch. However, there has been no published work thus far relating to the stamp forming of CF/PEEK composite sheets, in which samples are formed below the melting point of the material. Stamp forming requires less pre-heating than hot forming, which saves both time and energy. Developing an understanding of this material in stamp forming processes is an important step toward reducing manufacturing costs, and allowing it to be utilised in a broader range of applications.

This study investigates the formability of CF/PEEK in stamp forming processes. Composite blanks were heated to various temperatures below T_m and formed until failure using a hemispherical punch in an open-die configuration. During forming, the strain on the lower surface of the blank was measured in real-time using three-dimensional photogrammetry. The results were compared to monolithic aluminium blanks using the same method. Of particular interest in this study is the influence of the glass transition temperature in the PEEK (approx. 145°C). Above this temperature, the crystal structure of PEEK softens and becomes amorphous, which is expected to have a significant effect on the formability of the composite.

The intention of this research is to begin developing an understanding of the solid forming capabilities of CF/PEEK. The forming of monolithic aluminium has been widely researched

and is well understood, so it provides a suitable point of reference from which to analyse this relatively novel material.

2 Materials and testing methods

The apparatus in the experiment consisted of a hydraulic stamping press and a fan-forced oven. The blanks formed at various temperatures were heated in the fan-forced oven, and then held at the required temperature for five minutes before being placed in the press. The press used was a 300kN double-action mechanical press, shown in Figure 1. Tests were performed by a dome-shaped punch that deformed the blanks until failure. A pneumatic blankholder applied a 2kN force to the edge of the blank during the forming process. This served to partially restrain the blank, while allowing some material to draw into the die. Figure 2 illustrates the experimental setup.

Figure 1. Mechanical press used in stamp forming experiments.

The CF/PEEK and aluminium samples tested in this study were 180mm circular discs. The CF/PEEK blanks were created by consolidating four plies of Pi preg®, which is a prepreg thermoplastic composite system developed by Porcher Industries. Each ply contains high-strength carbon in a plain weave, in which each roving is made up of 3000 individual fibres. The volume fraction of the composite is 50%. The resulting sheets have a thickness of 0.9mm. The aluminium blanks were cut from roll-formed 5005-H34 aluminium sheets with a thickness of 1.0mm.

CF/PEEK blanks were formed at room temperature, 200°C and 300°C, while the aluminium blanks were formed at room temperature. Each test was repeated once to ensure accuracy of results. During forming, the strain on the bottom surface of the blank was recorded using a strain measurement system (ARAMIS) manufactured by GOM, mbH, Germany. ARAMIS correlates images from two high-speed, high-resolution CCD digital cameras to provide a full field three-dimensional strain measurement of the bottom surface of the blank.

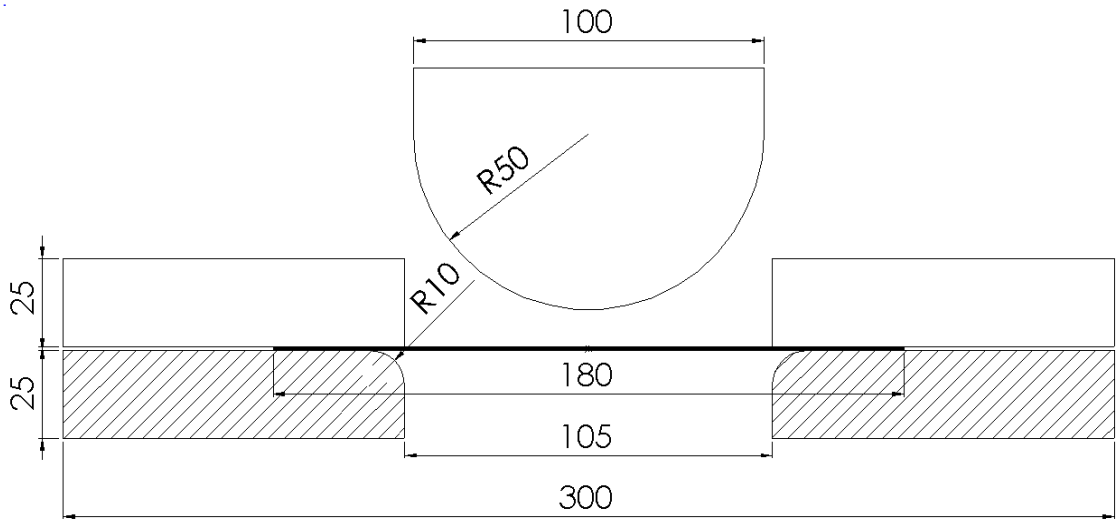

Figure 2. Cross section of the experimental stamp forming setup, including the blank (black) die, blankholder, and punch.

The evolution of strain is investigated at three points of interest: The centre of the blank, i.e. the pole of the formed dome; the unsupported edge of the blank, 20mm away from the pole in the fibre direction (or the rolling direction in the Aluminium); and the unsupported edge in the 45° direction. For future reference, these points have been labelled A, B and C respectively. They are shown in Figure 3.

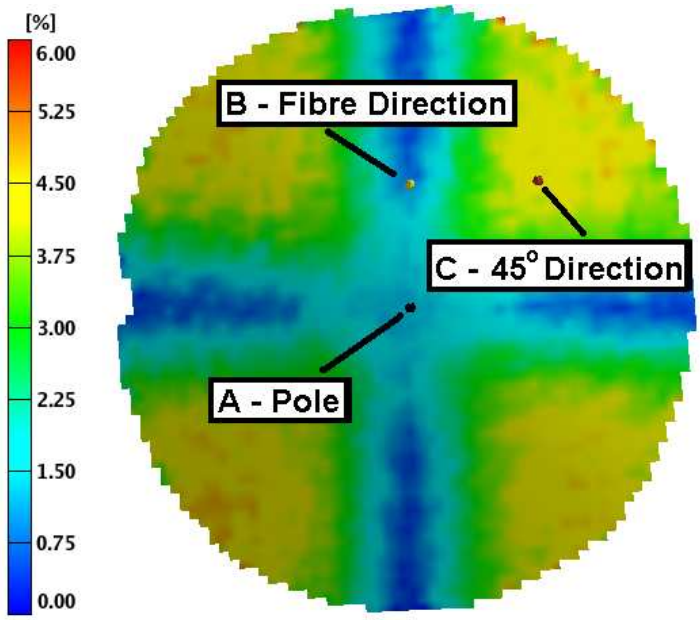

Figure 3. Contour plot of the major strain in a CF/PEEK sample heated to 300°C at a forming depth of 18mm.

3 Results & Discussion

A summary of the forming depth achieved in each experiment is provided in Table 1. Aluminium demonstrates superior formability to the CF/PEEK in every trial, but these results show that the composite approaches a comparable formability as the preheat temperature is increased. This observation agrees with the literature regarding the mechanical properties of PEEK at high temperatures, which states that the modulus of unfilled PEEK is substantially reduced above the glass transition temperature [11]. Increased forming depths are possible

because the reduction in stiffness restricts the ability of PEEK to transmit forces to the carbon fibre. This allows greater strains within the composite before the fibres break.

Experiment Type	Forming Depth (mm)	
	Trial #1	Trial #2
CF/PEEK - Room Temperature	12.5	13.5
CF/PEEK – 200°C	16.5	16.5
CF/PEEK – 300°C	18.0	18.0
Aluminium – Room Temperature	24.5	24.5

Table 1. Summary of the forming depth achieved in each experiment.

The difference in forming behaviour between the CF/PEEK and aluminium is highlighted in the evolution of strain at the three points described in the experimental method. Figure 4 plots the major strain at point A (pole) versus depth for the aluminium sample, and the CF/PEEK at different preheat temperatures.

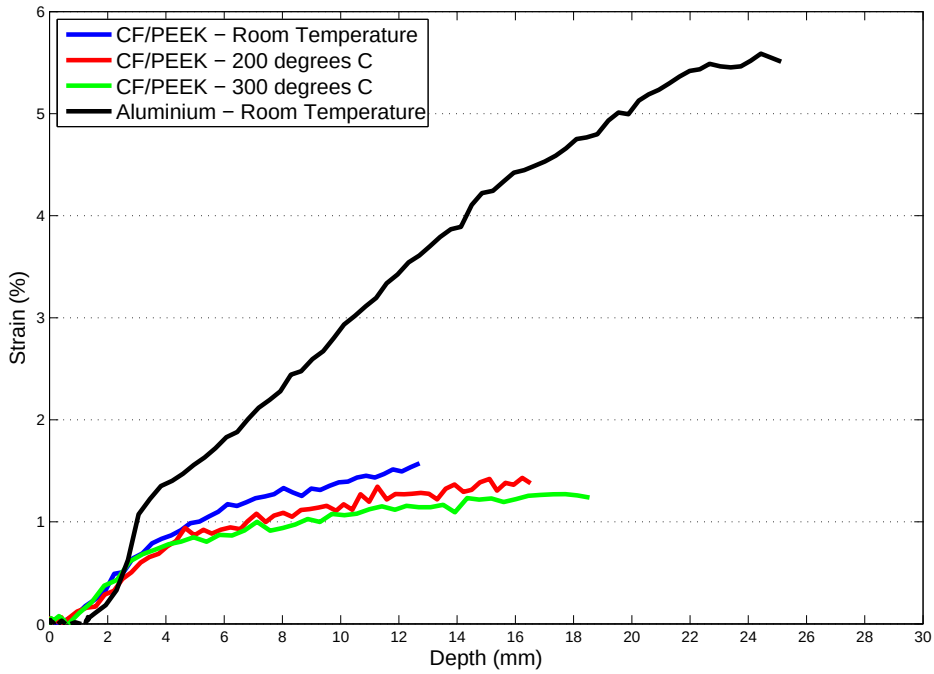

Figure 4. Evolution of major strain at point A, the pole of the formed dome during stamp forming.

During the first stages of forming, the CF/PEEK blanks exhibit similar major strains at the pole. The strain increases monotonically before flattening out as the forming depth increases. During the later stages of forming, the effect of preheat temperature is evident in the composite. The heated blanks form to greater depths and yet exhibit less major strain at the pole. This would suggest that the increased temperature is causing the material flow in other regions of the blank, permitting greater forming depths.

The polar strain (point A) in the aluminium blank appears to increase exponentially at first, and increases approximately linearly beyond a depth of 3mm. When compared at a depth of 12mm, it is evident that the strain at the pole is much greater in the aluminium blank than in the composite. It is likely that this is due to the different mechanical properties of the two materials. At 12mm, the aluminium has yielded and is deforming plastically. Therefore the pole is allowed to continually deform with a relatively low increase in stress. Conversely, the

CF/PEEK behaves in a linear elastic manner at these strain levels [8]. As the forming depth increases, the polar strain begins to flatten out, presumably because the stiffness of the material is preventing any further deformation in this region.

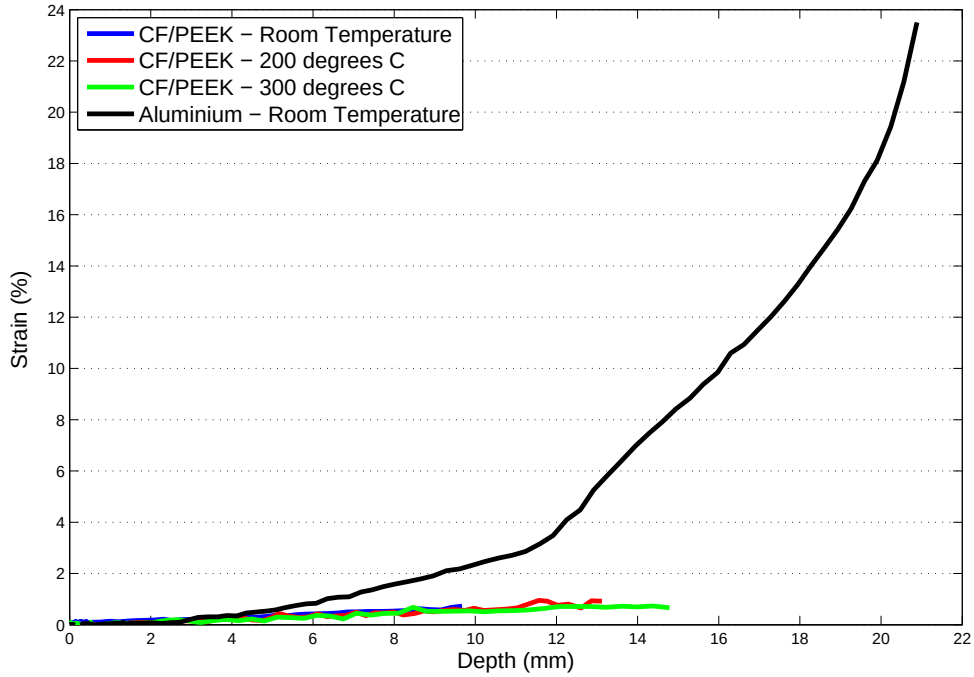

Figure 5. Evolution of major strain at point B, 20mm from the pole of the formed dome in the fibre direction (or rolling direction).

Figure 5 illustrates the major strain at point B, in the fibre direction of the composite and the rolling direction of the aluminium. The punch is not in contact with the sample here, so according to sheet forming theory, the forming mode is plane strain at this point [12]. According to both the Von-Mises and Tresca yield criteria for the forming of monolithic metals, the major strain will be at a maximum, and failure is most likely to occur in this region. This was observed in both aluminium forming experiments. Failure occurred in the rolling direction, presumably due to some planar anisotropy [12]. The evolution of strain in the CF/PEEK blanks was almost identical at point B, and this can be attributed to the plane strain forming mode. Because all strain is in the fibre direction at this point, deformation of the composite is heavily dependent on the carbon fibre. Unlike PEEK, the mechanical properties of carbon fibre exhibit very little temperature dependence [13]. As a result, the strain path of the composite is not significantly affected by temperature at this point.

Figure 6 shows the evolution of major strain at a point C, 45° to the fibre direction (or rolling direction). As expected, the strain behaviour of the aluminium at this point is similar to the behaviour at point B, because the aluminium is almost isotropic. Point C is further from the pole than point B, and it therefore does not reach the same forming depths or strain levels. In contrast to the strain at B, the major strain in the CF/PEEK at 45° reaches higher levels than the aluminium formed to the same depth. Here, the room temperature CF/PEEK sample exhibited a major strain of 1.5% at failure. This is approximately the same strain that was achieved at point A. The CF/PEEK samples that were preheated show significant increases in major strain at point C when compared to the point A. The high strains at 45° are caused by deformation in the PEEK matrix. The orientation of the weave at this point allows for large

shear strains which do not require elongation in the carbon fibre. This is confirmed by the fact that the major strain in the composite exhibits a strong temperature dependence at 45°.

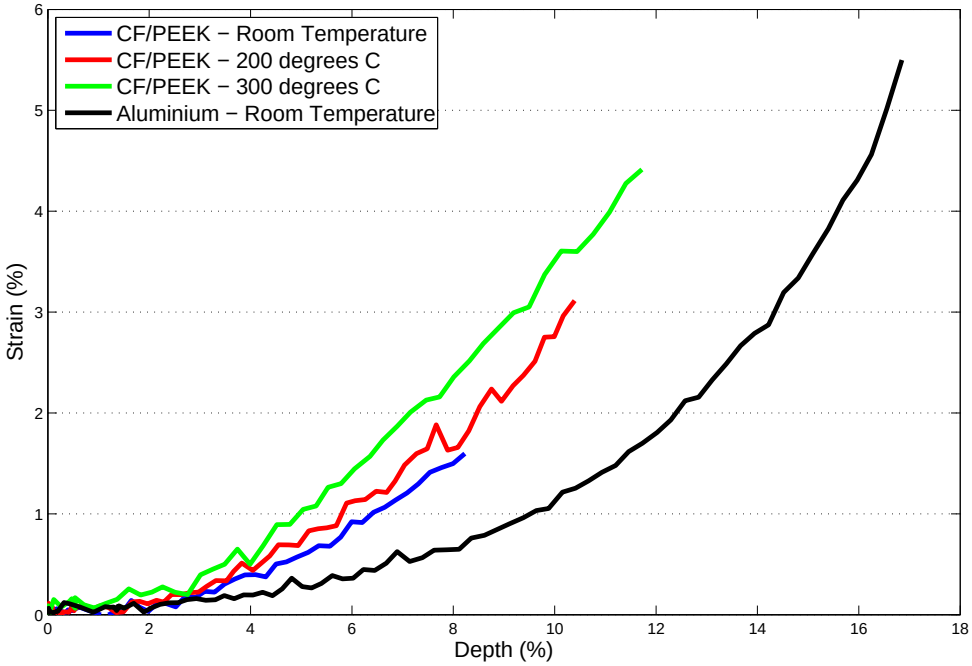

Figure 6. Evolution of major strain at point C, 45° to the fibre direction (or rolling direction) of the material.

4 Conclusions

This work shows that the formability of CF/PEEK composite sheets in stamp forming processes is strongly dependent on the preheat temperature of the material. High temperatures allow for significant material flow at 45° to the fibre direction. This permits forming depths approaching those of 5005- H34 aluminium, and formed parts with a much higher specific strength.

References

[1] Vieille, B., Aucher, J. and Taleb, L. Comparative study on the behaviour of woven-ply reinforced thermoplastic or thermosetting laminates under severe environmental conditions. *Materials and Design*, **35**, pp. 707-719 (2012).

[2] Lee J.H., Vogel, J.H.and Rhee, K.Y., An analysis of stretch forming of thermoplastic composites. *Polymer Composites*, **23**, pp. 442-453 (2002).

[3] Venkatesan, S. *Stamp Forming of Composite Materials: An Experimental and Analytical Study*. PhD thesis, Australian National University, Canberra (2012).

[4] Sexton A., Cantwell, W. and Kalyanasundaram S. Stretch forming studies on fibre metal laminate based on a self-reinforcing polypropylene composite. *Composite Structures*, **94**, pp. 431-437 (2012).

[5] Gresham, J., Cantwell, W., Cardew-Hall, M.J., Compston, P. and Kalyanasundaram, S. Drawing behaviour of metal/composite sandwich structures. *Composite Structures*, 75, pp. 305–312 (2006).

[6] Mosse, L., Compston, P., Cantwell W., Cardew-Hall M.J. and Kalyanasundaram, S. The effect of process temperature on the formability of polypropylene based fibre metal laminates. *Composites: Part A*, **36**, pp. 1158–1166 (2005).

[7] Mosse, L., Cantwell, W., Cardew-Hall, M.J., Compston, P. and Kalyanasundaram, S. The development of a finite element model for simulating the stamp forming of fibre metal laminates. *Composite Structures*, **75**, pp. 298–304 (2006).

[8] Diao, X., Ye, L. Mai, Y. Fatigue behaviour of CF/PEEK composite laminates made from commingled prepreg. Part I: experimental studies. *Composites Part A*, **28A**, pp. 739-747 (1997).

[9] Martin, T.A., Bhattacharyya, D. and Pipes, R.B. Deformation characteristics and formability of fibre-reinforced thermoplastic sheets. *Composites Manufacturing*, **3**, pp. 165-172 (1992).

[10] Meyer, B., Katsiropoulos, Ch. and Pantelakis, Sp. Hot forming behavior of non-crimp fabric peek/c thermoplastic composites. *Composite Structures*, **90**, pp. 225-232 (2009).

[11] Victrex plc. *A comprehensive review of the materials properties of VICTREX® PEEK™ high performance polymer*. Victrex plc, Lancashire (2012)

[12] Marciniak, Z., Duncan, J.L. and Hu, S.J. *Mechanics of Sheet Metal Forming*. Butterworth-Heinemann, Woburn, MA (2002).

[13] Vettegren, V.I., Bashkarev, A.Ya, Barausov, A.V., Gabaraeva, A.D., Pikulin, V.A. and Savitskii, A.V. Temperature dependences of the strengths of a carbon fiber and a three-dimensional reinforced carbon-carbon composite. *Technical Physics*, **53**, pp. 59-63 (2007).