EXPLICIT FEM SIMULATION OF VEGA LAUNCH VEHICLE SOLID ROCKET MOTORS SEA IMPACT AND SINKING

C. Di Trapani [1], E. Mastrella [1], A. Zallo [1], G. Pantanella[1], M. Benedetti [2], M. Calcagni [3]

[1] *AVIO Spa, Corso Garibaldi 22, Colleferro (Rome), Italy, 00034,*
[2] *University of Rome "La Sapienza", Via Eudossiana 18, Rome, Italy, 00184*
[3] *MSC Software S.r.l, Corso d'Italia 45, Rome, Italy, 00198*
Email: claudia.ditrapani@aviogroup.com

Keywords: Vega, water impact, explicit

Abstract

VEGA Launch Vehicle is the small European expandable launcher developed by the European Space Agency. It is designed to deliver from 300 to 1500 kg payloads into Polar and low Earth orbits. VEGA is a single body launcher, which consists of three solid rocket stages and a liquid rocket upper module called AVUM.
The VEGA program is subjected to the application of safety requirements to the launcher. To avoid the risk of floating wreckage several safety international laws (UN-61-1547 and 78-847) requires that "a body falling back into the ocean must sink, so as not to form wreckage representing a danger to navigation". The activity presented in this paper is focuses on the verification of the fulfilment of the sinking of VEGA SRM (solid rocket motors) after the impact with the sea surface. Analysis is performed with MSC DYTRAN solver by using explicit FE simulation.

1 Introduction

VEGA Launch Vehicle is the small European expandable launcher developed by the European Space Agency. It is designed to deliver from 300 to 1500 kg payloads into Polar and low Earth orbits. VEGA is a single body launcher, which consists of three solid rocket stages, the P80 FW first stage (97 tons of weight, 3.05 m diameter and 11.7 m length), the Zefiro 23 second stage (26 tons of weight, 1.9 m diameter and 8.5 m length), the Zefiro 9 third stage (11.5 tons of weight, 1.9 m diameter and 4.4 m length), and a liquid rocket upper module called AVUM.
VEGA qualification maiden flight has been successfully performed on February 13th 2012 from the Kourou Space Center. VEGA launcher structures are characterized by a large use of composite materials as demonstrated by the case of the solid rocket motors that is based on filament wounded carbon epoxy.
As for all the space project, the VEGA program is subjected to the application of safety requirements to the launchers. Their fulfillment must be mandatory respected and verified by the design authority. In particular, in view of the potentially catastrophic consequences of launcher fall-back, it is necessary to be able to reduce the risk of this occurring. Among others, pursuant to international law, it is necessary to prevent the formation of wreckage

dangerous to maritime navigation (UN - 61-1547 and 78-847). So the launcher has to fulfill the following prescription:

No floating wreckage: a body falling back into the ocean must sink, so as not to form wreckage representing a danger to navigation (requirement independent of the security objectives).

VEGA solid rocket motors are equipped with neutralization devices consisting in pyrotechnic charges aimed to break the SRMs case after the stages separation and so assuring the sinking. In any case, the scenario induced by the possible failure of these devices must be faced. For this reason, the activity presented in this paper, focuses on the verification of the fulfilment of the sinking of VEGA SRM after the impact with the sea surface in case of failure of the neutralization devices. If the impact of the structure with the water induces such damage that allow the filling of the water inside the combustion chamber, and the remaining entrapped air is not sufficient to sustain the structure floating, the sinking requirement is satisfied.

Structures water impact is an interesting topic to be investigated which involves several engineering problems such as ship slumming, torpedo water entry and space body sea landing. This kind of issues are currently faced by employing complicated models built by simulation tools generally based on Finite Element Model theory. While MSC.NASTRAN finite element models of the launcher are currently developed and available, additional tools are required for the CFD part.

MSC.Dytran delivers a structural, material flow and coupled FSI capabilities in a single package. Dytran's explicit nonlinear solver technology is ideal for extreme, short-duration events and allows to simulate models that involve high degree of nonlinearities – material, geometric and boundary condition nonlinearities. MSC.Dytran uses a unique coupling feature that enables integrated analysis of structural components with fluids and highly deformed materials in one continuous simulation. MSC.NASTRAN models are also easily imported and used in the simulation environment. Aim of the present work was to evaluate the applicability of such an environment , to study VEGA solid rocket motors sea impact and sinking problem.

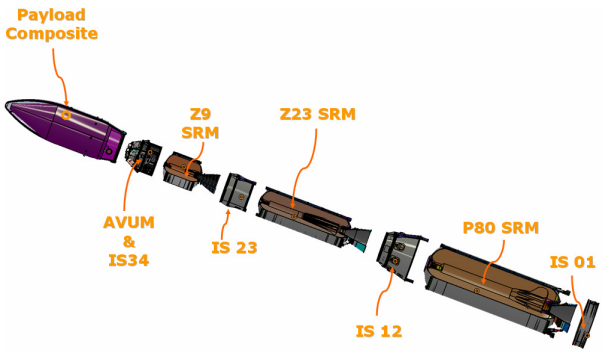

Figure 1. VEGA general description

2 Theoretical background

Caused by the difficult to set-up and to perform complex test, various theories have been developed and their results are used as benchmark. Analytical approaches for rigid body water impact problem have been developed by von Karman (see [1]) and Wagner: a brief presentation of both the approaches is hereunder shown.

2.1 Von Karman's Theory 1-D approach

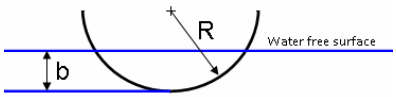

Figure 2. *Von Karman's theory body sketch*

The classical impact theory developed by von Karman, 1-D approach for spherical shaped body water impact, for vertical impact of a spherical bottom shaped rigid body with radius R at 0° trim angle, presented in Figure 2, is based on the momentum conservation theorem:

$$m_{in}V_{in} = m_{fin}V_{fin} \tag{1}$$

Basic concept is that during the impact the momentum lost by the impacting body can be considered to be transferred to some finite mass of water, defined as virtual mass m_w, in contact with the body which has a downward velocity equal to that of the body. Since the entire momentum of the body is assumed to be distributed between the body and the virtual mass of water, the momentum of the body and the virtual mass is constant during the impact, and the motion of the body subsequent to the instant of initial contact can be determined from the basic relationship:

$$\left(\frac{W}{g}\right)V_0 = \left(\frac{W}{g} + m_w\right)V \tag{2}$$

Where W is the weight of the impacting body, g is gravity acceleration, V0 is body initial velocity, m_w is the virtual mass of water and V is the actual value of velocity. For a spherical bottom shaped body, virtual mass has the following expression:

$$m_w = \frac{4}{3}\rho b^{\frac{3}{2}}(2R - b)^{\frac{3}{2}} \tag{3}$$

Where R is the radius of the spherical bottom, ρ is water density and b is the length of the body immersed part. By assuming $b/R << 1$ and substituting the previous equation it is possible to obtain a formulation for acceleration, from which the maximum value formulation is:

$$a_{\max} = -\frac{256}{243}\left(\frac{4\rho g R^3}{3W}\right)^{\frac{2}{3}}\left(\frac{V_0^2}{R}\right) \tag{4}$$

2.2 Von Karman's Theory 2-D approach: cylindrical shaped body water impact

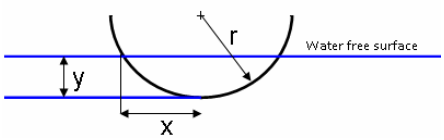

Figure 3. *Von Karman's theory body sketch*

As for 1-D approach the conservation of momentum is applied. In present case water virtual mass m_w is equal to the half mass of the fluid contained in a circular cylinder of diameter equal to the width of the immersed part 2x and can be expressed as it follows:

$$m_w = \frac{1}{2} x^2 \rho \pi \tag{5}$$

From geometrical consideration and repeating the same steps of the 1D approach the maximum value of acceleration will be reached at the bottom (x=y=0):

$$a_{\max} = \frac{\rho g \pi \cdot r}{W} V_0^2 \tag{6}$$

2.3 Wagner's Theory

Differently from von Karman's approach, Wagner's takes into account the rise of water due to the splash up which has found to have significant effect on the impact force. Recently Miloh used a semi-Wagner approach to determine the slamming coefficient Cs, a non dimensional parameter defined as it follows:

$$C_s\left(\frac{b}{R}\right) = \frac{2F}{\rho \pi R^2 V_0^2} \tag{7}$$

Where F is the impact force. Based on analytical derivations, Miloh proposed the following expression for the initial stage slamming:

$$C_s\left(\frac{b}{R}\right) = 5.50\left(\frac{b}{R}\right)^{\frac{1}{2}} - 4.19\left(\frac{b}{R}\right) - 4.26\left(\frac{b}{R}\right)^{\frac{3}{2}} \tag{8}$$

Then maximum acceleration can be estimated as:

$$a_{\max} = \frac{g}{2W} C_s\left(\frac{b}{R}\right)_{a_{\max}} \rho \pi R^2 V_0^2 \tag{9}$$

Where $(b/R)_{a_{\max}}$ is that obtained from the von Karman's theory.

3 Water impact problem with explicit solution

In this paper an explicit solution performed by MSC DYTRAN program has been adopted [2][3][4].

MSC DYTRAN code perform two solving technique (Lagrangian and Eulerian solvers) which can be coupled to define an interaction. The code has implemented two different types of coupling approach:

- General Coupling,
- Arbitrary Lagrangian Euler coupling (ALE).

In this paper general coupling technique has been adopted in order to reduce the complexity

of the eulerian mesh definition, and moreover during the benchmark analysis a fast algorithm for the general coupling has been used (FAST COUPLING technique).
The explicit method doesn't need any iteration process but it is not unconditionally stable: in order to reach a solution the following condition on time step choice has to be satisfied:

$$\Delta t \leq \min\left(\frac{L_c}{c_d}\right) \tag{10}$$

In conclusion explicit method is particularly suitable for problem characterized by short time period, this is the reason why it has been chosen to solve the water impact problem. First of all the method has been validated by the use of a benchmark and then applied to the solid rocket motor sea impact problem.

3.1 Explicit solution validation: space capsule water impact

In order to validate the explicit analysis in the water impact problem solution, a space capsule water impact problem ([5]) has been used and considered as benchmark.
Two different cases have been analyzed: firstly the capsule has been considered as a full rigid body, then constituted by a rigid upper part and a flexible bottom part.
Fluid dynamics in an Eulerian frame of reference is described by the conservation laws of mass, momentum and energy in a volume V that is bounded by a surface A with surface normal n.

$$\begin{aligned}
\frac{d}{dt}\int_V \rho dV + \int_A \rho(u\cdot n)dA &= 0 \\
\frac{d}{dt}\int_V \rho u_i dV + \int_A \rho u_i(u\cdot n)dA &= -\int_A p n_i dA \\
\frac{d}{dt}\int_V \rho e dV + \int_A \rho e(u\cdot n)dA &= -\int_A u_i p n_i dA
\end{aligned} \tag{11}$$

Here p and are respectively pressure and density; u is the velocity vector and e the total energy per unit mass. The pressure in Eulerian fluid material is either given by the ideal gas law, or by a polynomial function of density. For shell elements a finite element method is used including a stress-train material model and failure criteria.

The changes in mass, momentum and energy of an Euler element occurring in a time step follow by applying the conservation laws to the effective volume of the Euler element. Surface integrals are computed by integration across the effective boundary of the Euler element and represent the amount of mass, momentum and energy that is transported through the surface. The procedure used to compute the transported amounts and the time integration determine the order of the accuracy.
Transport of material between Euler elements is based on a donor–acceptor scheme.
Transport velocities only depend on Euler element velocities and not on pressures. In the momentum balance the force exerted by material in one Euler element onto the material in an adjacent Euler element is given by the element pressure. This first order solver is being used in this paper.
Ambient pressure boundary condition has been applied on water free surface and an outflow boundary condition has been applied on Eulerian domain walls, moreover a gravity effect has been considered.

Air has been considered as void material while water has been modeled as slightly compressible by applying the following equation of state:

$$P(\rho) = K\left(\frac{\rho}{\rho_0} - 1\right) \tag{12}$$

Where K = 2.2GPa is water bulk modulus, ρ0 = 1000 Kg/m3 is water initial density while p and ρ are respectively actual values of water pressure and density.
In Figure 4 are reported respectively the mesh and deformation shape of DYTRAN model; each point represents the maximum deceleration evaluated at the center of gravity of the full rigid capsule. As can be noticed both the numerical results obtained in [5] and those obtained with the DYTRAN solver lay between the ones from the theoretical approaches.

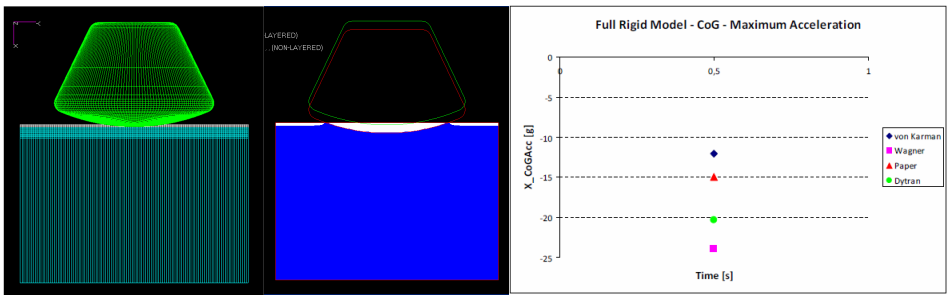

Figure 4. Mesh and deformed shape and full rigid Capsule, CoG max acceleration

For the case of semi-flexible structure in Figure 5**Error! Reference source not found.** is represented respectively the acceleration at the capsule center of gravity and the displacement at capsule bottom center and at the center of gravity. The results obtained by MSC DYTRAN are compared to those obtained in reference paper [5].
The results show good correlation between those obtained from FEM model developed by MSC DYTRAN with the corresponding achieved by reference paper. Anyway it is evident the difference in amplitude, increasing with time, especially for the displacements at the capsule CoG. Such differences can be justified by the different coupling technique employed. In fact while in reference paper an ALE coupling technique is used, which enables Eulerian mesh to move following lagrangian mesh deformation, in MSC DYTRAN model a FAST COUPLING technique, in which only lagrangian mesh moves, has been employed. Considering the aim of our study (SRM break and sinking) MSC DYTRAN general coupling technique results could be considered conservative with respect to the ALE coupling used in the reference paper. On the other hand, in terms of frequencies trends the curves are completely comparable.

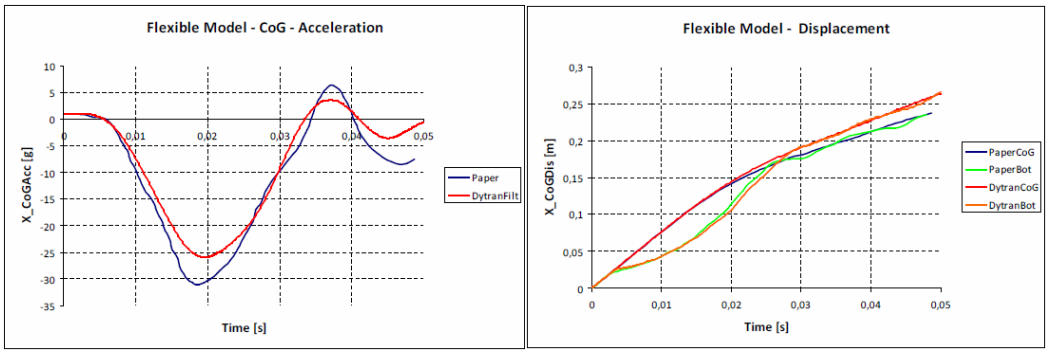

Figure 5 Flexible capsule, acceleration and displacement

3.2 Solid Rocket Motor water impact analysis

VEGA Solid Rocket Motors present a large use of composite materials: in fact their cylindrical part, domes and skirts are composed by filament wounded carbon epoxy. Other parts, such as the polar bosses are of aluminum.
In the SRM FEM, composite materials have been modeled as 2D orthotropic elements meanwhile the polar bosses are two ring-shaped structures modeled as 3D isotropic elements.
Failure model for the materials has been specified. In particular Maximum Stress failure theory has been selected to perform the analysis: in case one element reaches the stress allowable value, the elements break. For the composite part, regarding property degradation due to fibre-tension or fibre-compression, has been chosen to degrade all material properties. Moreover in the model each ply of composite material is considered as homogeneous so the selected failure criteria doesn't take into account micromechanics phenomena such as fibre pull-out. That leads to more conservative approach since stresses values of stress necessary to bring elements to failure are higher than those required in reality.

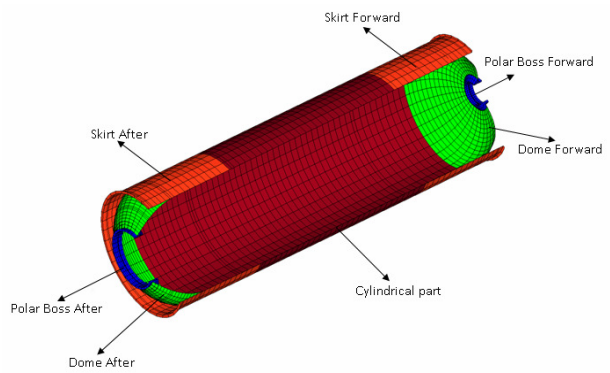

Figure 6. SRM architecture

Different load cases depending on impact velocity and angle of attack have been considered. For reason of brevity, in this paper only the extreme condition for impact at 0° and 90° are reported. To be conservative, the worst case velocity value has been considered which corresponds to the 40% of the nominal velocity of impact with the sea expected for the SRM.
For the horizontal impact (0°) the motor sinking is automatically verified, in fact all the case elements breaks as reported in Figure 7

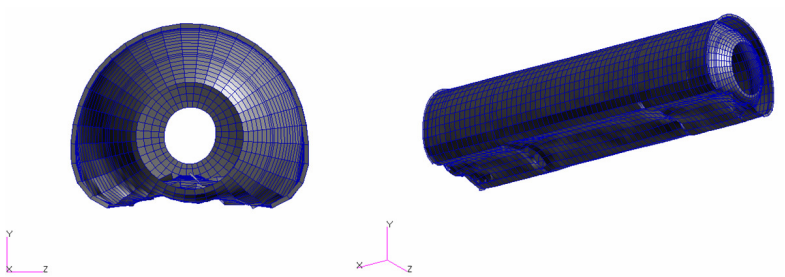

Figure 7. Side and global view α= 0° - Failed elements

On the other hand, in the case of vertical impact (90°), the analysis results show that only the after dome breaks. Figure 8 shows the results for a characteristic section of the SRM model and Eulerian domain at different time steps. It is possible to notice how the Dome After deforms until the break, and at the same time a coherent distribution of water which follows Lagrangian mesh deformation is present. At the end of the simulation, the after dome condition is reported in Figure 8.

For the vertical impact, in order to verify Z23 sinking requirement, it is necessary to evaluate the structure damaging of both aft and forward part: only damaging of both allows water to enter inside the combustion chamber and evacuation of remaining entrapped air. Since no main components have completely failed on forward side this has been achieved by evaluating interface stress at Polar Boss connection (Figure 10). Such stresses have been found to be over the maximum allowable which means that Polar Boss Forward at the end of the phenomenon is completely debonded from composite dome leading to the sealing loosening and consequent sinking.

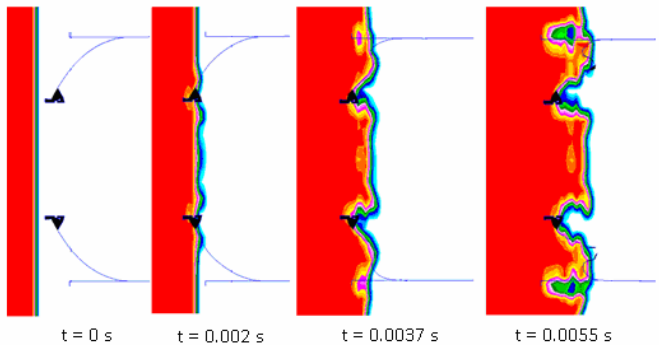

Figure 8 α= 90° Z23 after dome deformation

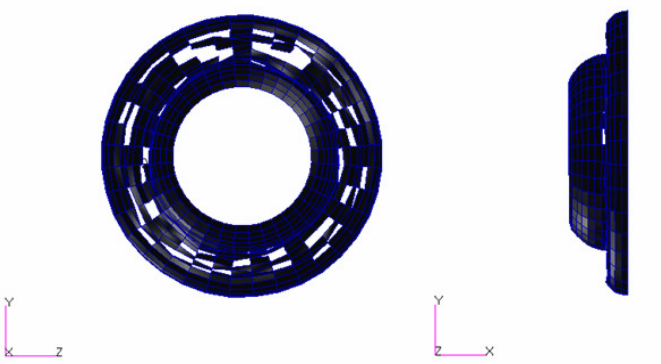

Figure 9 Dome After bottom and side view α= 90° - Failed elements

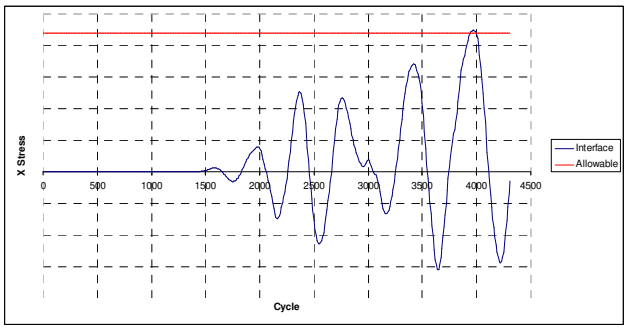

Figure 10 GNA Rubber – Polar Boss Forward interface X-Stress vs Cycle

4 Conclusion and future developments

In the present work it has been evaluated the applicability of a Finite Element Model, based on explicit solution approach performed by MSC DYTRAN solver, to study VEGA SRMs sea impact and sinking problem.

In fact one of the safety requirements (pursuant to international law) applicable to VEGA

launch vehicle is to prevent the formation of wreckage dangerous to maritime navigation (UN - 61-1547 and 78-847). So, in the case of failure of the pyrotechnic charges aimed to break the SRM case after the stage burn out and separation, must be verified if the impact of the structure with the water induces such damage that allow the filling of the water inside the combustion chamber, and the remaining entrapped air is not sufficient to sustain the structure floating. In this case the sinking requirement is satisfied.
The applicability of the explicit solution approach performed by MSC DYTRAN solver has been first of all verified with a benchmark concerning space capsule water landing (sea impact problem well known and present in literature).
For the Vega SRM, the worst case velocity value corresponding to the 40% of the nominal expected velocity of impact with the sea has been assumed.
In this paper two different angle of attack of the SRM with the sea surface have been considered.
Another conservative assumption of the presented model is that each ply of composite material is considered as homogeneous so the selected failure criterion doesn't take into account micromechanics phenomena such as fibre pull-out. In this way the values of stress necessary to bring elements to failure are higher than those required in reality.
The sinking has been fully verified for the angle of attack 0° and 90°.
As future development a more sophisticated model can be implemented:

- a more realistic and less conservative failure criteria for the composite elements could be implemented also taking into account micromechanics phenomena such as fibre pull-out.
- a more realistic modelling of polar boss interface with dome by considering its hyperelastic behaviour in order to achieve more reliable results in terms of stress and elements failure. Last improvement could be the definition of porous coupling surfaces, which would enable water to fill the domain defined by Lagrangian mesh to better describe physical phenomena.

AKNOWLEDGEMENTS

The authors would like to thank their colleagues at AVIO Group, the University of Rome "La Sapienza" and MSC Software.

REFERENCES

[1] Von Karman T., 'The Impact on Seaplane Floats during Landing', Technical Note 321 NACA, Washington, D.C.,1929.

[2] MSC Dytran 2010 Theory Manual, The MacNeal-Schwendler Corporation, Los Angeles, CA.

[3] MSC Dytran 2010 User's Guide, The MacNeal-Schwendler Corporation, Los Angeles, CA.

[4] MSC Dytran 2010 Reference Manual, The MacNeal-Schwendler Corporation, Los Angeles, CA.

[5] John T. Wang and Karen H. Lyle, 'Simulating Space Capsule Water Landing with Explicit Finite Element Method', NASA Langley Research Center, Hampton, VA 23681.

[6] Edwin L. Fasanella and Karen E. Jackson, 'Water Impact Test and Simulation of a Composite Energy Absorbing Fuselage Section', US Army Research Laboratory, Vehicle Technology Directorate, Hampton, VA 23681.

[7] John R. McGehee, Melvin E. Hathaway, Victor L. Vaughan, Jr. 'Water Landing Charactristics of a Reentry Capsule', NASA Memorandum, Langley Research Center,1959.